Appliance Data Sheet

Product Type	**Electric Oven**
Product Code	**UBO731BK**
	**Product Description**
	60cm Multifunction 73L True Fan Oven
	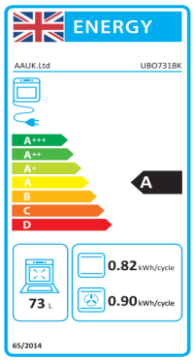 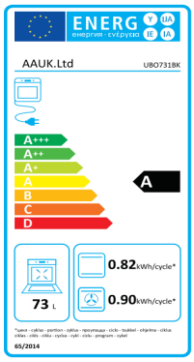

Features / Specification	
Barcode	8422248619233
Colour	Black Glass
Net Oven Cavity	73L
Cooking Type	True Fan
Control Type	Rotary Knobs
Timer	Minute Minder
Display Colour	Red
Functions	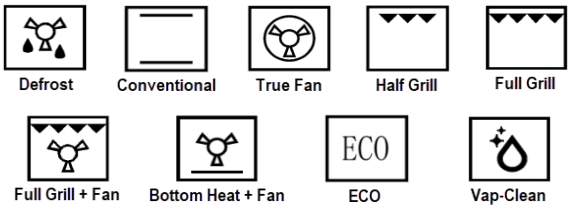
Oven Light	Yes
Self Cleaning	Vap-Clean (Basic Hydrolytic)
Oven Shelves	2
Oven Tray	1
Grill Trivet	1

Dimensions & Technical Information

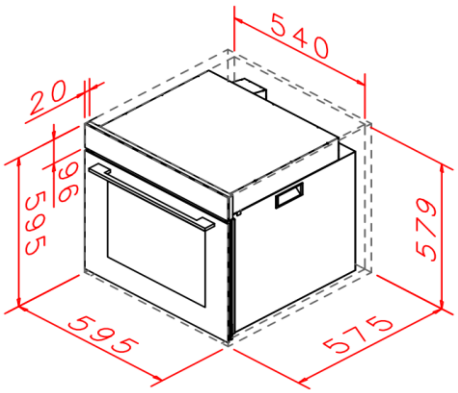

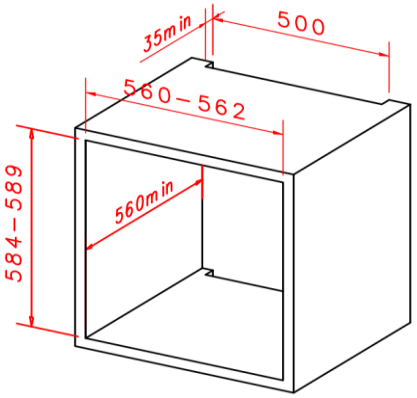

Product Dimensions (W x H x D)	595 x 595 x 575mm
Packed Dimensions (W x H x D)	625 x 665 x 655mm
Product Weight	35kg Packed / 32.5kg Unpacked
Power Supply	220-240V ~ 50/60Hz
Max Power	2800W
Cable / Plug	1.2m / UK
Supply Connection	13A